C870
Core™ i7 3U VPX SBC

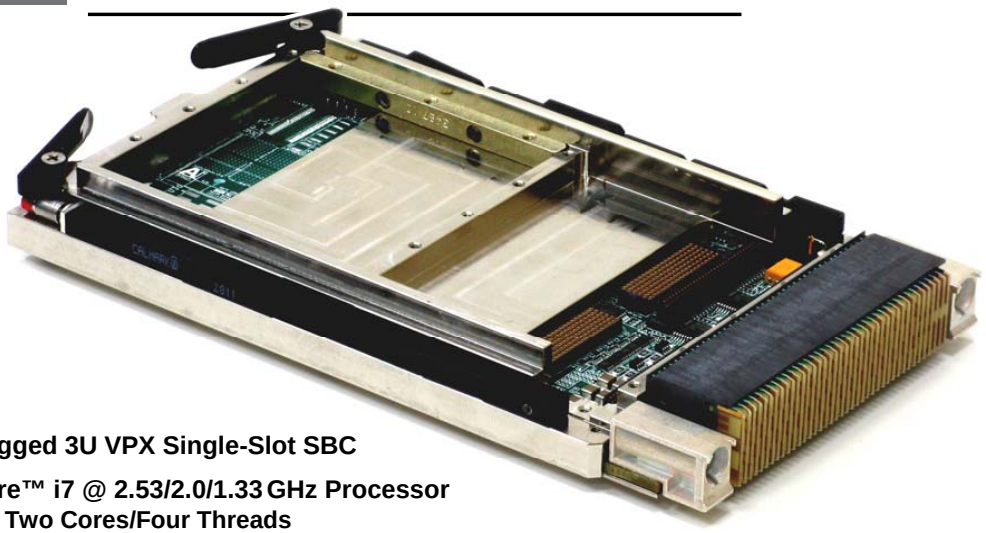

- Rugged 3U VPX Single-Slot SBC
- Core™ i7 @ 2.53/2.0/1.33 GHz Processor
  - Two Cores/Four Threads (Intel® Hyper-Threading® Technology)
  - Intel Virtualization Technology for Directed I/O (Intel VT-d)
  - Streaming SIMD Extensions 4.2 (Intel SSE4.2) SSE 4.2
  - On-chip 32 kB Data/32 kB Instruction L1 Cache per core
  - 256 k L2 Cache per core
  - 4 MB L3 Cache shared between cores
  - High Performance Graphics Controller
- Memory Resources
  - Up to 4 GB DDR3 SDRAM @ 1066 MHz with ECC
  - Up to 64 GB SATA Flash Disk
  - Dual Redundant BIOS Flash
- I/O Interfaces
  - Four Gigabit Ethernet Ports
    - Two 1000Base-T Ports
    - Two 1000Base BX/KX Ports
  - Four USB 2.0 Ports
  - Two SATA II Ports
  - Two RS-232/422/485 Serial Ports
  - Eight Discrete I/O Lines
  - CRT and HDMI/DVI Display Outputs
  - High Definition Audio (In or Out)
- Two PCIe x4 VPX Fabric
- PMC/XMC Slot Supporting 32-bit PCI bus @ 33 MHz and PCIe x8 Gen 2.0
- System Resources
  - Two Temperature Sensors
  - Real Time Clock
  - Avionics Windowed Watchdog Timer
  - Trusted Program Module (TPM)
  - Elapsed Time Recorder
  - Intelligent Platform Management Interface (IPMI)
- Software Support
  - Windows™
  - Linux®
  - VxWorks®
- OpenVPX Compliant
- Auto System/Peripheral Detection
- VITA 48 (REDI) Compliant
- Conduction and Air-Cooled Versions
- Vibration and Shock Resistant

Tel: +31 105298827 Fax: +31 105298828 Email: verkoop@ampliconbenelux.com

Aitech

C870 – Core™ i7 3U VPX SBC

Aitech's C870 is a high-performance 3U VPX SBC (Single Board Computer) for embedded and harsh environment applications. The C870 is based on Intel's Calpella (Arrandale + ECC) platform, dual-core processor and four threads (Intel Hyper-Threading Technology) with large integrated on-chip L1, L2 caches and shared L3 Cache with a companion QM57 PCH I/O controller hub.

The processor's integrated 2D/3D graphics controller supports graphics and video processing and provides CRT and DVI output channels.

The C870 integrates large on-board memory arrays to support processor and user application needs. Memory resources include up to 4 GB fast DDR3 SDRAM with ECC protection and up to 64 GB SATA Flash disk for user/application-specific parameter storage.

In addition to its high-performance processor architecture, the C870 provides a wide variety of I/O, including four Gigabit Ethernet, four USB 2.0 ports, two SATA II ports, two UART ports, up to eight general-purpose discrete I/O channels, and high-definition stereo audio I/O. To further expand its capabilities, the C870 is equipped with an industry-standard PMC/XMC slot.

The C870 form factor is 3U OpenVPX. It is capable of communicating with two other PCIe/Ethernet OpenVPX modules in full mesh topology with no need for a switch module. Of course it can communicate with multiple modules through an OpenVPX switch module.

The C870 is available in air-cooled and conduction-cooled versions.

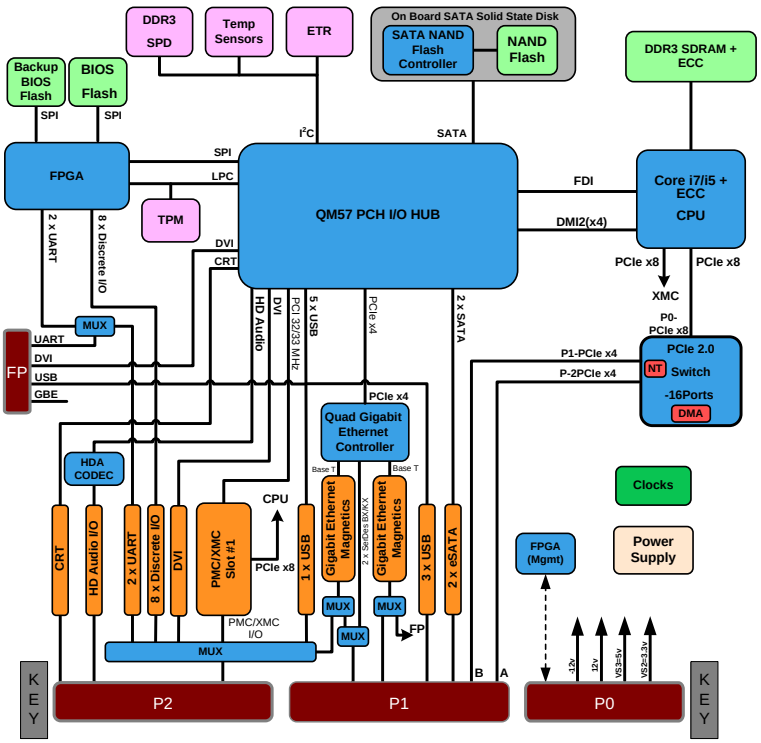

C870 Block Diagram

Aitech

Functional Description

Processor and Bus Architecture

The C870 is a high-performance 3U VPX SBC based on Intel's Calpella platform, and supported by extensive memory arrays. In addition the board's architecture is designed to utilize all bus interfaces to the maximum.

System Architecture

The Calpella platform is based on the Intel® Core™ i7 Processor (Intel's high-performance, low-power mobile processor) and Platform Controller Hub (PCH). This two-chip solution utilizes the dual core processor, memory controller and graphics core in a single device, with the PCH providing the platform I/O and display interfaces in a second device.

Core i7 Processor

The Core i7 Processor device provides the host interface controller, system memory interface (DDR3), direct media interface, and integrated graphics engine, and also supports external graphics interfaces (over a PCI Express port). The Core i7 includes two PCIe x8 ports for connectivity to platform devices.

Core i7 is Intel's high performance, low power processor based on the Intel Core micro-architecture with Two Cores/Four Threads (Intel Hyper-threading Technology), 32 kB on-die instruction and data L1 caches, a 256 MB on-chip L2 cache, and 4 MB shared L3 cache.

The processor operation speed can be factory configured to 2.53 GHz for high performance, 2.0 GHz for low power, and 1.33 GHz for ultra low power.

Platform Controller Hub (PCH)

The PCH integrates a number of I/O device controllers and interfaces supporting legacy and high-speed resources to allow system design flexibility. The PCH also integrates in it HDMI and CRT controllers which receive their display data from the Core i7 integrated graphics controller over the Intel Flexible Display Interface (Intel FDI) interconnecting the Core i7 device with the PCH.

VPX Capabilities

VPX Data Plane Fabric Interfaces

The C870 supports 2 PCIe x4 ports (A and B) on the VPX P1 connector for its fabric interconnection to the VPX backplane switch fabric. The fabric interface is configurable as a single x8 port, two x4 ports, or eight x1 PCIe ports. PCIe (VITA 46.4 compliant) is suited to connecting with PCIe-based peripheral devices. Any PCIe port can be configured as non-transparent, enabling connection to remote root-complex boards.

VPX Control Plane Switch Support

The C870 is capable of connecting to a switch slot per VITA 46.9 by routing two Gigabit Ethernet ports to P1, enabling the designer to connect those ports to a switch slot per VITA 46.20.

OpenVPX Slot Profile

The C870 supports seven slot profiles (see ordering information) as defined in the OpenVPX specification (VITA 65):

SLT3-PAY-2F2U
- PAY = Payload board
- 2F = Two fat pipes (2 PCIe Lane x4)
- 2U = Two ultra-thin pipes (SerDes BX/KX)

SLT3-PAY-2F2T
- PAY = Payload board
- 2F = Two fat pipes (2 PCIe Lane x4)
- 2T = Two thin pipes (1000Base-T)

SLT3-PAY-1D
- PAY = Payload board
- 1D = 1 Double fat pipe (1 PCIe Lane x8)

SLT3-PAY-2F
- PAY = Payload board
- 2F = Two fat pipes (2 PCIe Lane x4)

SLT3-PAY-1F4U
- PAY = Payload board
- 1F = One fat pipe (1 PCIe Lane x4)
- 4U = 4 ultra-thin pipes (4 PCIe Lane x1)

SLT3-PAY-8U
- PAY = Payload board
- 8U = 8 ultra-thin pipes (8 PCIe Lane x1)

SLT3-PER-2F
- PER = Peripheral board
- 2F = Two fat pipes (2 PCIe Lane x4)

VPX System Management

System level management monitoring of board health status information (e.g. rail voltages, board temperatures, etc.) is available over the VPX connectors via the I^2C bus at P0. The system management unit is powered from the VPX +3.3 Vdc Auxiliary power supply and is available even in the event of board failure or power loss.

VPX REDI (VITA 48)

The C870 is VPX REDI compliant. It supports two-level maintenance per VITA 48, with top and bottom covers shielding the complete C870 assembly including installed PMC/XMC modules.

Aitech

Memory

The C870 is equipped with large memory arrays providing the user with extensive volatile and non-volatile memory resources. These arrays include up to 4 GB of fast DDR3 (Double Data Rate) SDRAM with error correction (ECC) operating at 1066 MHz, and 4 MB of Flash BIOS.

Flash Disk

A SATA II Flash Disk of up to 64 GB provides on-board mass storage, eliminating the need for externally attached mass-storage media. The Flash Disk is controlled by the SATA controller integrated in the PCH I/O hub.

The SATA Flash Disk is soldered on the board for maximum reliability under harsh environmental conditions.

Integrated Graphics Controller

The C870 includes an on-board graphics controller implemented in the Core i7. The graphics core is the Intel Gen 5.75 with 12 execution units, capable of 2D/3D graphics processing, supporting Microsoft DirectX 10 and SGI OpenGL 2.1.

The graphics core implements Intel's Floating Point technology enhancing the visual quality of the generated image.

The C870 provides video output interfaces supporting CRT (RGBHV) at up to 2048x1536 @ 75 Hz) and single link HDMI/ DVI at up to 1920x 1200 @ 60 Hz with integrated audio.

Trusted Platform Module (TPM)

A TPM chip on the C870 can be used increase computing security in several ways. For example, the TPM device can be accessed by application software to ensure that it (the software) is running on trustworthy hardware, or to prevent unauthorized software from running.

Refer to the TPM specification and documentation for additional detail.

Intelligent Platform Management Interface (IPMI)

An IPMI controller on the C802 supports system-level management monitoring of board health and status via the I^2C bus at P0 connector. This enables external monitoring of board resources such as rail voltages, board temperatures, and board information whenever the board is powered on.

I/O Interfaces

In addition to its extremely high processing power, the C870 provides a wide variety of I/O capabilities.

Ethernet

Two 10BaseT/100BaseTX/1000BaseT interfaces and two 1000BaseBX/KX interfaces are implemented in a Quad Gigabit LAN Controller (with integrated PHY) using four of the PCH PCIe lanes.

USB 2.0 Ports

USB Rev. 2.0 host controllers (backward compliant with Rev. 1.0 and Rev. 1.1) integrated in the PCH provide four USB 2.0 ports. The controllers integrate the USB transceivers supporting high-speed, full-speed, and low-speed signaling. The C870 is capable of providing power to downstream devices.

SATA II

Two SATA II interfaces enable connection of external mass storage devices to the C802. The SATA II interface is fully compliant with the Serial ATA 1.0 specification with SATA II extensions, supporting data transfer rates of up to 300 MB/s.

Serial I/O

The C870 provides two UART serial ports supporting full RS-232/422/485 physical interfaces. Serial ports are fully compliant with the 16550 programming model.

Discrete I/O

Up to eight single-ended or four differential general-purpose discrete I/O channels are provided on the C870. Each channel may be independently configured as input or output. Configured as input each of these channels may be programmed to generate an interrupt on any level shift event.

The eight discrete I/O channels are divided into four groups, each controlling two signals. Each group may be configured as two single-ended TTL channels or one differential RS-422 channel.

HD Audio

The PCH supports Intel’s High Definition (HD) Audio, which is compliant with Microsoft’s Universal Audio Architecture (UAA). Using an HD Audio codec, the C870 provides a stereo interface that is software configurable as input or output.

Aitech

PMC/XMC Expansion

The C870 provides an industry standard expansion slot for extended flexibility and integration of additional elements to the SBC. The expansion site is capable of operating as PMC or XMC.

The PMC site resides on the PCH native 32-bit PCI bus and operates at 33 MHz. The PMC site is universal supporting both 3.3 V and 5 V PCI I/O signaling levels. The slot therefore does not include a voltage key.

The XMC slot connects to the CPU subsystem through a PCIe x8 port. The PCIe interface supports x8, x4, x2 and x1 bus widths and is compliant with PCIe Revision 2.0 at 2.5 GHz.

The XMC slot is fully complaint with VITA 42.

I/O Routing

C870 on-board I/O resources and PMC/XMC I/O are available at the VPX P2 backplane connector in accordance with VITA 46.9 – pattern P64s for PMC and X20d24s for XMC.

Due to the limited number of I/O pins available on the VPX P2 connector, it is not possible to simultaneously route all C870 on-board I/O plus all PMC/XMC I/O to the backplane. The C870 is therefore available in several standard factory configured variants providing different combinations of on-board and PMC/XMC I/O. Refer to the *I/O Routing to VPX Connector* field of the C870 ordering information for available variants.

Timers

The C870 includes one 32/64-bit and seven 32-bit timers/counters providing high-precision timing functionality. These timers can be chained together (cascaded) to support long timing interval counting applications.

An real-time clock (RTC) provides time and date keeping.

Both standard and windowed (avionics-style) watchdog timers are available on the C870. Implemented in the system FPGA, the windowed watchdog must be serviced within a software programmable window defined by minimum and maximum times. If serviced too early, too late, or not at all, this watchdog timer will generate a timeout event. It may be independently set to generate a non-maskable interrupt or reset the SBC.

Elapsed Time Recorder

An on-board electronic Elapsed Time Recorder (ETR) records cumulative operation time and power on-off cycles in a dedicated NVRAM whenever the C870 is powered. ETR data is software accessible by the user.

Software

Test and Diagnostic Features

The C870 is supplied with a customized BIOS tailored to its architecture, capabilities, and features.

The BIOS includes POST capabilities as well as system configuration options for boot device, boot sequence, etc.

A JTAG/COP interface to the processor is provided for debugging and development purposes.

Operating Systems

The C870 with its custom BIOS fully supports installation and operation of the following operating systems:

- Microsoft Windows™
- Linux®
- WindRiver VxWorks®

Operating system specific device drivers are provided for all on-board resources, allowing the user to take full advantage of the C870's powerful features.

Support for other operating systems may be available upon request.

Mechanical Features

The C870 is available in four mechanical formats.

Features & Dimensions

- Air-cooled per ANSI/VITA 46.0
- Air-cooled REDI: per VITA 48.1
- Conduction-cooled per ANSI/VITA 46.0
- Conduction-cooled REDI: per VITA 48.2

All mechanical formats are single slot 3U modules.

A custom metal frame integral to the conduction-cooled version of the C870 provides excellent rigidity and shock resistance. The frame also provides an array of stiffeners to support rugged PMCs/XMCs.

Weight

- Air-cooled: < 300 g (0.66 lbs)
- Air-cooled REDI: < 325 g (0.72 lbs)
- Conduction-cooled: < 330 g (0.73 lbs)
- Conduction-cooled REDI: < 355g (0.79 lbs)

Thermal Management

Careful mechanical design, including custom heatsinks combined with a metal frame, allow for optimal heat dissipation and relief of the board. The C870 is also equipped with two temperature sensors, located at temperature-critical locations, to monitor board temperature and provide temperature data to user application software.

Aitech

Power Requirements

The C870 takes all its power from the VPX backplane. It should be provided with +5.0 V, +3.3 V, and ±12 V as defined by the Open VPX specification (±12 V is required for PMC/XMC compliance only; the C870 does not require ±12 V for its own operation).

All other power sources required by C870 resources are generated on board.

Total power consumption of the C870 depends on its configuration and assembly options.

In its fully featured configuration (no PMC/XMC installed), C870 power consumption with the different processors options, in WindowsXP idle condition and when running the PassMark® BurnInTest (CPU, memory, graphics), is as follows:

Input Voltage	Processor		
	1.33 GHz	2.0 GHz	2.53 GHz
+3.3 V	1.2/1.2 A		
+5.0 V	2.5/4.5 A	2.6/6.1 A	2.6/8.2
+12 V	0 A (no PMC/XMC mounted)		
–12 V	0 A (no PMC/XMC mounted)		
Power	16.6/26.5 W	17.0/34.5 W	17.0/45.0

* Values are Idle/PassMark

Environmental Features

Please refer to the Aitech Ruggedization datasheet.

Accessories

Optional accessories for the C870 include the TM870 Rear Transition Module (RTM) and the CM870 3U VPX PMC/XMC Carrier.

For system integration and other development purposes, the TM870 RTM provides convenient access via standard connectors to all C870 I/O interfaces and all PMC/XMC I/O. The RTM supports both the air-cooled and conduction-cooled versions of the C870 when mounted in a commercial air-cooled chassis.

The CM870 is a 3U VPX PMC/XMC carrier on which any industry standard PMC/XMC can be mounted. Using one or more CM870s, system functionality can be significantly expanded by enabling the C870 to control additional PMCs/XMCs over the VPX backplane.

Please refer to the TM870 and CM870 datasheets for additional information.

C870
Core™ i7 3U VPX SBC

Ordering Information for the C870

☐ C870 ☐ - ☐ ☐ ☐ ☐ ☐ ☐ - ☐ ☐

Ruggedization Level
1 = Commercial
2 = Rugged
4 = Military

Aitech Item Number

Processor Speed
S = Processor @ 2.53 GHz
L = Processor @ 2.0 GHz
U = Processor @ 1.33 GHz

Cooling + Pitch
Air-Cooled
A3 = 1"
Conduction-Cooled
R0 = 0.8"
R2 = 0.85" (Two Level Maintenance)

Backplane Fabric
0 = SLT3-PAY-2F2U
1 = SLT3-PAY-2F2T
2 = SLT3-PAY-1D
3 = SLT3-PAY-2F
4 = SLT3-PAY-1F4U
5 = SLT3-PAY-8U
6 = SLT3-PER-2F

SDRAM
9 = 2 GB
A = 4 GB

I/O Routing to VPX Connector
1 = All on-board I/O + limited PMC I/O
2 = All on-board I/O + limited XMC I/O
3 = Partial on-board I/O + all PMC I/O
4 = Partial on-board I/O + all XMC I/O
9 = Custom (contact Aitech sales rep)

SATA Flash Drive
1 = 16 GB
2 = 32 GB
3 = 64 GB*
* may interfere with some PMCs/XMCs

Configuration No.
To be assigned by Aitech

Example: 2C870L-R25912-00