A172

Rugged Compact PC

- Rugged Reduced SWaP PC
- Flexible Configuration Options
  - CPU
  - Memory
  - Mass Storage
  - OS
- I/O Interfaces
  - Gigabit Ethernet
  - Serial Ports
  - USB 2.0
  - Stereo Audio Line IN + Line OUT
  - Discrete I/O
  - DVI Outputs
  - CANbus
  - Composite Video Inputs
- Mini PCIe Slot for I/O Expansion
- D38999 I/O and Power Connectors
- Wide Input Voltage Range
- MIL-STD-704 and MIL-STD-1275 Compliant
- Modular Design
- Operating System Support
  - Windows®
  - Linux®
  - VxWorks®
- Environmentally Sealed (IP65)
- Natural Convection Cooled
- No Electrolytic Capacitors
- Compact and Lightweight

Tel: +31 105298827 Fax: +31 105298828 Email: verkoop@ampliconbenelux.com

A172

Rugged Compact PC

Aitech's A172 Rugged Compact PC (RCP) is a small, low power, high performance, rugged computer, suitable for any application that requires a high performance reliable RCP.

The A172 is designed around a standard COM Express (Type 6) module, which contains the system CPU and SDRAM, and provides a number of standard I/O interfaces.

The COM Express module is hosted on an Aitech main board, which provides additional I/O interfaces, and includes two mini SATA (mSATA) sites and two mini PCIe sites.

The mini SATA sites can accommodate standard SSD modules for system Flash mass storage and the mini PCIe slots can accommodate standard modules to provide additional system functionality.

The usage of standardized modules (COM Express, mini PCIe, and mini SATA) in the A172 design enables Aitech to build customized versions of the system to meet specific customer requirements (contact your Aitech representative for additional information), and also allows Aitech to offer updated system configurations as newer modules become available.

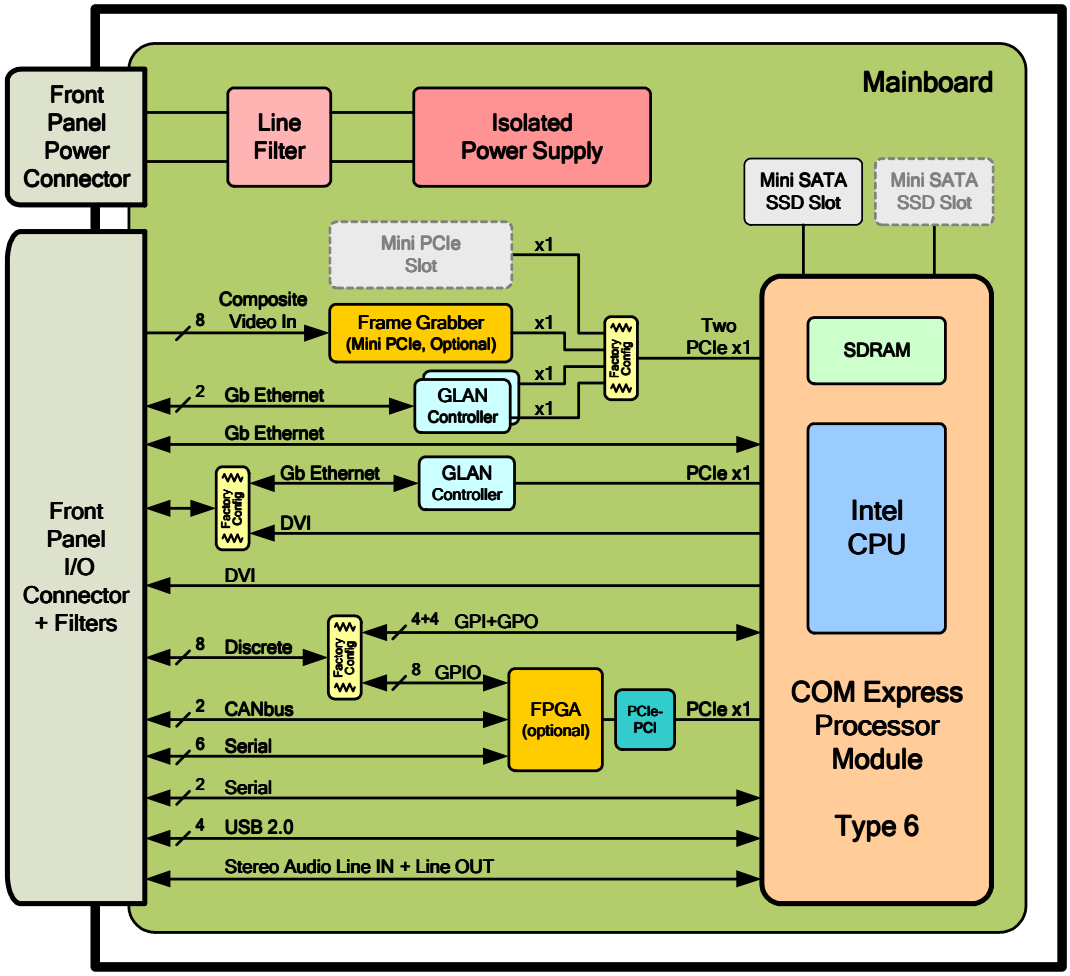

A172

Rugged Compact PC

Input Power

- Wide input voltage range
  - 10 – 32 V_{DC} steady state operation
  - 12 V_{DC} turn-on threshold
- Input reverse polarity protection (up to 32 V_{DC})
- EMI/RFI input filter
- On-board supplies isolated from external supply
- MIL-STD-704 and MIL-STD-1275 compliant

Mechanical

Dimensions	260 x 180 x 46 mm [10.24 x 7.09 x 1.81"]
Weight	<2.25 kg [5 lb]

Environmental

Operating Temp.	-40 to +70 °C
Non-Operating Temp.	-55 to +100 °C
Vibration	V2 per VITA 47
Operating Shock	OS1 per VITA 47
Altitude	-1,500 to +60,000 ft. (1)
Relative Humidity	0 – 100%
Fungus	Fungus Resistant

Rain	MIL-STD-810F, Method 506.4, Procedure III
Dust	MIL-STD-810F, Method 510.4, Procedure I & II
Salt Fog	MIL-STD-810F, Method 509.4
Bench Handling	MIL-STD-810F, Method 516.5, Procedure VI
Ingress Protection	IP65
EMI/RFI	MIL-STD-461

Notes: (1) Depending on temperature and system power dissipation

A172

Rugged Compact PC

COM Express Module

Model	CPU	Memory	OS Support [3]	POWER
A172S	Intel Core i7-4650U (4th Gen) • 2 Cores/4 Threads • 1.7 GHz Base Frequency • 3.3 GHz Turbo Frequency • HD Graphics 5000 • PassMark Score: 4123	DDR3L (non-ECC) @ 1600 MT/s Ordering Options : • 8 GB Single Channel • 16 GB Dual Channel	VxWorks 6.9.4 Windows 7 ULT 64-bit Linux	• Minimum: 12 W [1] • Typical: 30 W [2]
A172B	Intel XEON E3-1505L v6 (7th Gen) • 4 Cores/8 Threads • 2.2 GHz Base Frequency • 3.0 GHz Turbo Frequency • HD Graphics P630 (Gen 9) • PassMark Score: 7887	DDR4 (with ECC) @ 1600 MT/s Ordering Options : • 8 GB Single Channel • 16 GB Single Channel • 32 GB Dual Channel	Windows 10 64-bit Linux	• Minimum: 20 W [1] • Typical: 40 W [2]
A172C	Intel Core i7-7600U (7th Gen) • 2 Cores/4 Threads • 2.8 GHz Base Frequency • 3.9 GHz Turbo Frequency • HD Graphics 620 (Gen 9) • PassMark Score: 5595	DDR4 (non-ECC) @ 1600 MT/s Ordering Options : • 8 GB Single Channel • 16 GB Single Channel • 32 GB Dual Channel	Windows 10 64-bit Linux	• Minimum: 12 W [1] • Typical: 30 W [2]

Notes:
(1) Windows idle
(2) Windows running BurnIn test to exercise CPU (80%), RAM (60%), 2D/3D Graphics (60%), and Video 2D/3D playback
(3) Other operating systems may be partially supported, and additional driver porting may be available per customer request, depending on system configuration (contact an Aitech representative for more information)

I/O

	I/O Variant [1]			
	Variant #1	**Variant #2**	**Variant #3**	**Variant #4**
Gigabit Ethernet (1000Base-T)	4	3	2	
DVI Outputs (Single Link)	1	2		
Composite Video Inputs Supports RS-170A (NTSC)/PAL (auto detected) and simultaneous capture of all channels at full frame rates	N/A		8	
Serial Ports: UART 16550 compatible	8 x RS-232 / 2 x RS-422 + 2 x RS-422/485 [2] [3]			2 x RS-232
Discrete I/O (Single-Ended)	8 x Input/Output (software configurable)			4 x In + 4 x Out
CANbus [4] Independent, isolated CAN 2.0B compatible interfaces, bit rates up to 1 Mb/s, PeliCAN operation mode support	2			N/A
USB 2.0	4			
Stereo Audio Line IN	1			
Stereo Audio Line OUT	1			

Notes:
(1) A172 I/O Variants offer different combinations/quantities of I/O via factory configuration; additional I/O options may be available per customer request (contact an Aitech representative for more information)
(2) Variants 1, 2, and 3 provide four pairs of serial ports:
- All four pairs are each software configurable as two RS-232 ports or one RS-422 port
- Two of the four pairs are also each software configurable as one RS-485 port
(3) RS-422/485 serial port terminations are not installed by default
(4) CANbus terminations are installed by default

A172

Rugged Compact PC

Ordering Information

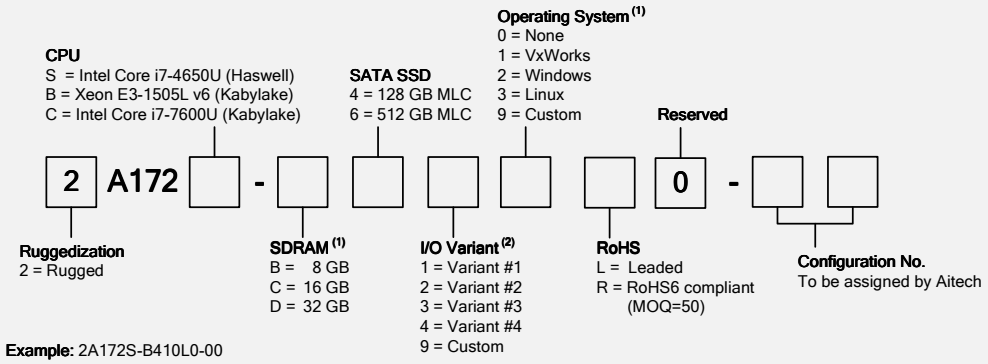

Notes: (1) Refer to the COM Express Module table for available options for each module
(2) Refer to the I/O table for I/O combinations per Variant

Optional Accessories

MCS172-1-00 *	Set of Front Panel Mating Connectors for I/O Variant 1, 2
MCS172-3-00 *	Set of Front Panel Mating Connectors for I/O Variant 3, 4
PSA-90W	90W Power Supply
TCA172-SK *	A172 Starter Kit comprising: • J1 Power Cable • J2 I/O Cable (1 x DVI, 2 x USB, 1 x GLAN, Audio Output)
A172 Custom Cable	Ask your Aitech sales representative

* Add "-CF" to part number for cadmium free (e.g.MCS172-1-00-CF)

Contact Aitech

Contact your Aitech sales representative for additional product information, and for inquiries regarding customized configurations of the A172 and additional software support.